SERVICE PART Nº	COMPONENT PART Nº	Nº REQ'D
11126	1139	1
HOUSING	1811	2
	1533-C	1
1542	10423	1
	[illegible]	
MINOR [illegible]		

A-03

PERMATEX

1575 1 REQ'D
1811 2 REQ'D
10972 REQ'D
1559 1 REQ'D

-CERAMIC SEAT
BRASS SLINGER
-SEALED BALL BR'G

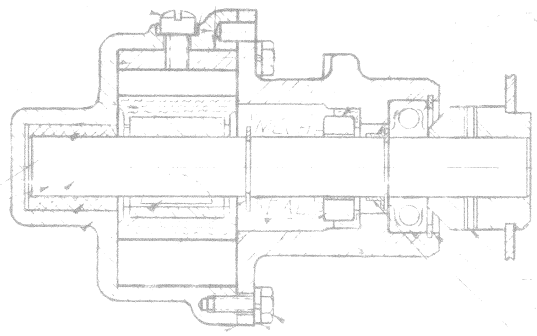

-1131 1 REQ'D

5/16-18 UNC-2B TAP
3/8 DIA x 1/8" C'T SINK
BACK SIDE

1597

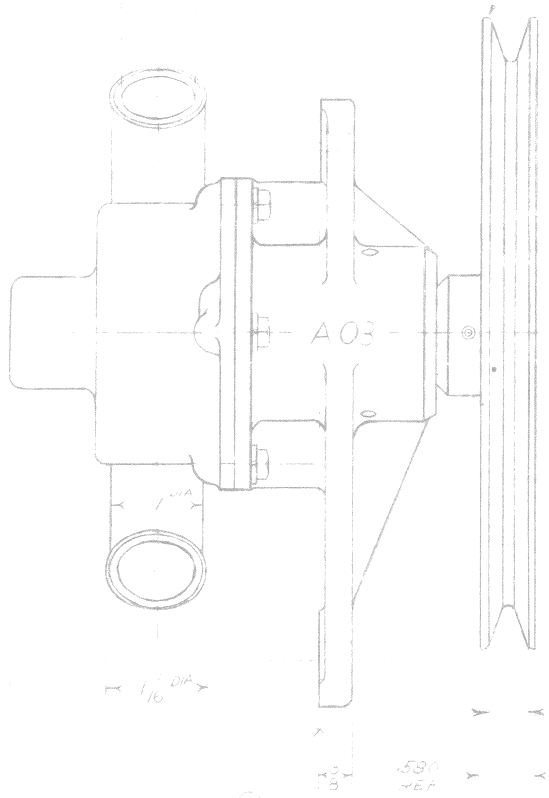

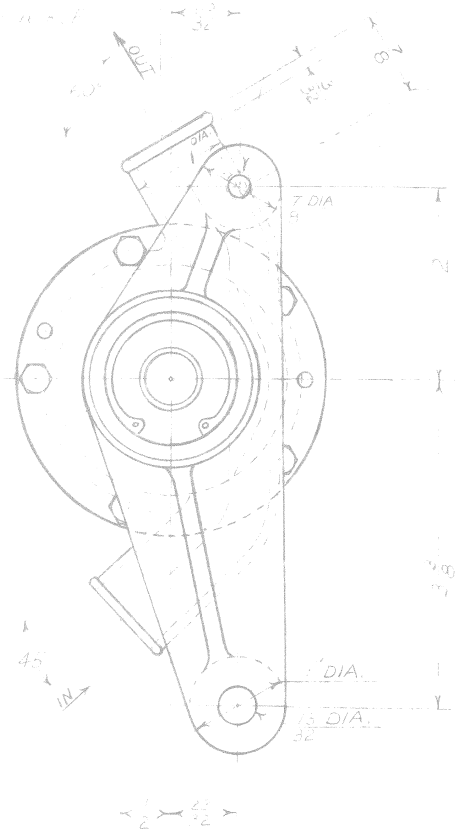

RD. LENGTH
2 PLACES

CLOCKWISE
ROTATION

CHRYSLER CORP. Nº 2659553

H	11145 KIT REVISED	RM	10-20-76
G	12792 KIT ADDED	RM	10-20-76
F	WAS 13/16 I.D.	A.V.B	9/17/66
E	WAS [illegible]		
D	CHANGED FROM 13/16 I.D. PER LATEST CHRYSLER DWG Nº 2659553	A.V.B	9/13/65
C	WAS Nº 9535 SCREW	A.V.B	9/2/65
B	WAS 1 17/32	A.V.B	8/5/65
A	DRAWING REVISED	T.F.M.	7/23/65

IMPELLER PUMP, PULLEY & PIN ASS'Y — SEE DETAILS

FULL
A.V.B 6-30-65
A.V.B 7-30-65

A-03