A-16

COVER ASS'Y No. 14227

SERVICE PART Nº	COMPONENT PART Nº	Nº REQ'D
10927 SEAL & SEAT	10523	1
	10926	1
11222 HOUSING	11221	1
	1311	2
	6333-G	1
11223 REPAIR KIT	6333-G	1
	4257	1
	10927	1
	10103	1
	9959	1

(J) 12904 PULLEY SERVICE ASS'Y

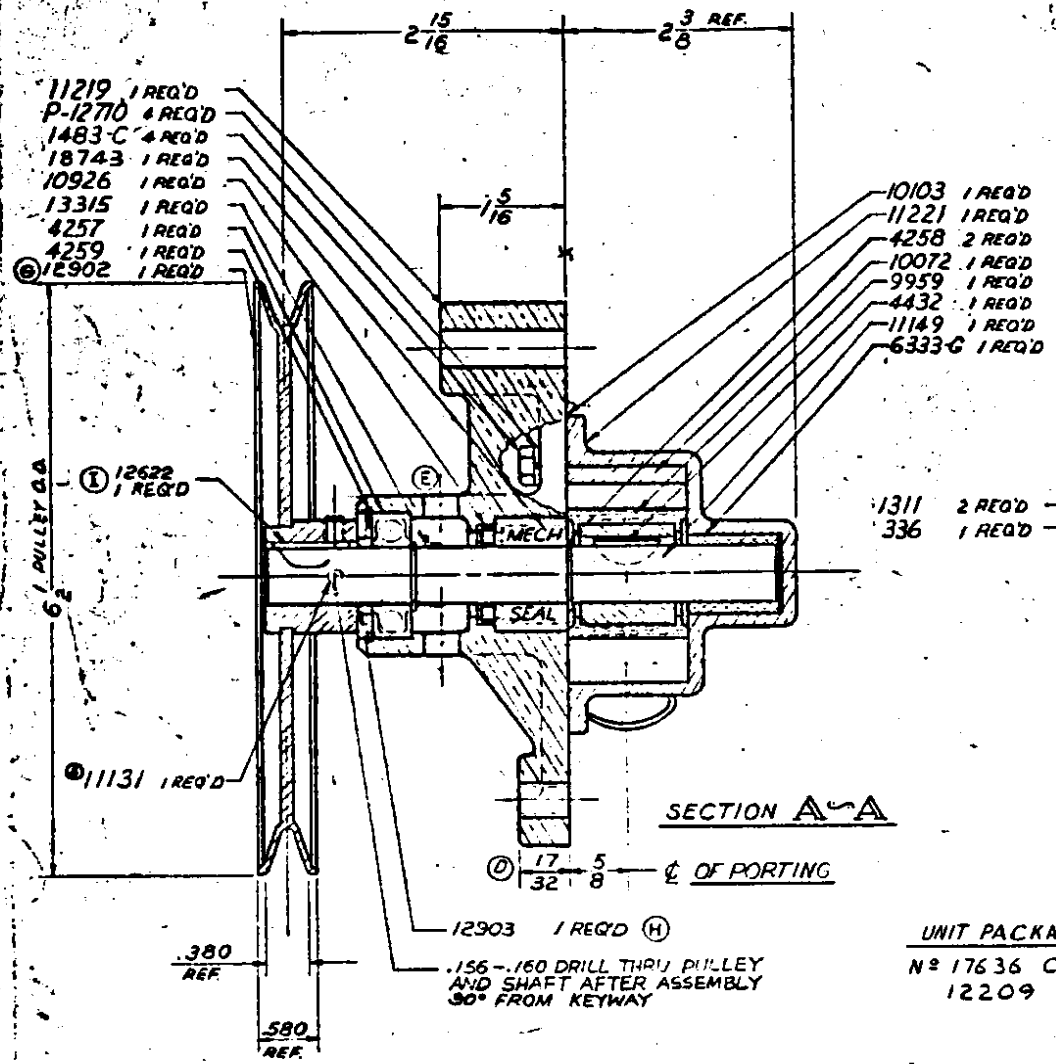

SECTION A-A

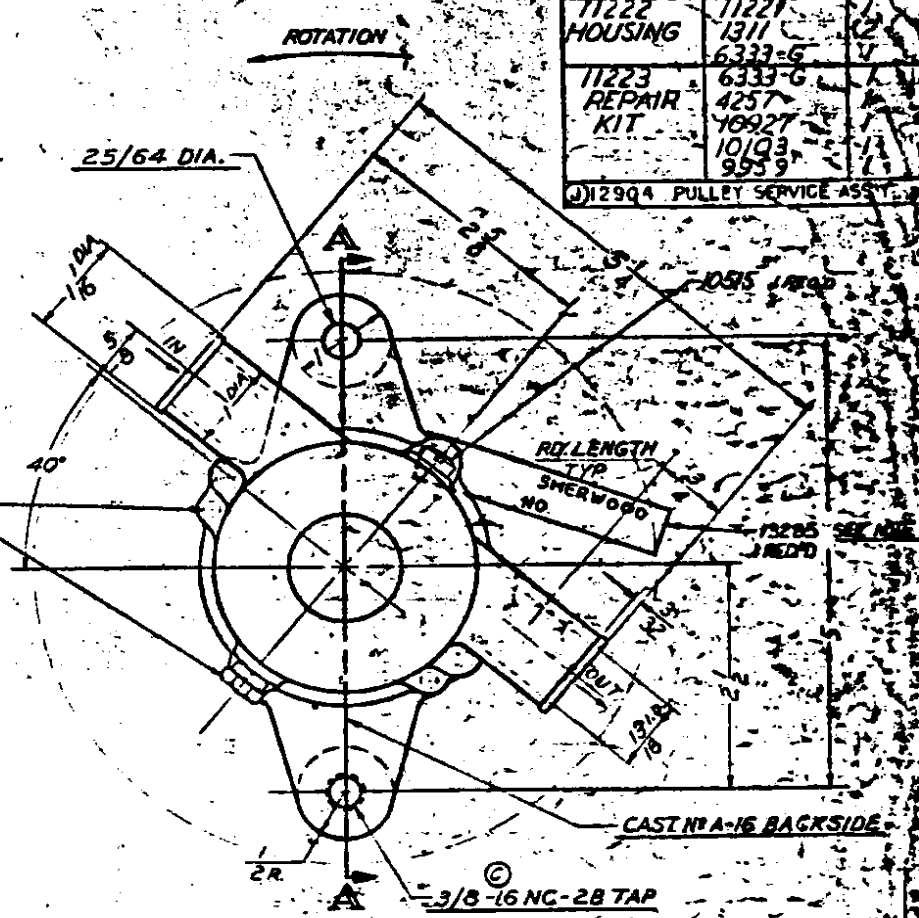

UNIT PACKAGING:

Nº 17636	CARTON W	1 REQ'D
12209	LABEL	1 REQ'D

NOTE 1: STAMP PUMP ASSEMBLY NO. A16 AND DATE CODE ON TAG. ATTACH WITH SCREW.

CAPACITY
18 G.P.M., 10 P.S.I. @ 3300 R.P.M.

FLOW CURVE NO. 5930

K	ADDED TAG 13285		
J	12904 PULLEY ASS'Y ADDED	RM	12-2-11
I	12622 KEY ADDED	RM	
H	12903 SPACER ADDED	RM	
G	12902 PULLEY WAS 11124	RM	
F	GREASE NOTE REMOVED	RM	11-6-79
E	DRAIN HOLE ADDED	TJ	11-19-76
D	BOSS ADDED		
C	WAS 25/64 DIA.		
B	PIN Nº 11131 ADDED		
A	WAS Nº 11144 PULLEY		

SHERWOOD
A DIVISION OF HYPRO CORPORATION
5521 E. JEFFERSON AVE. • DETROIT, MICHIGAN 48207

TITLE: RUBBER IMPELLER PUMP ASS'Y
MATERIAL: SEE DETAILS
SCALE: FULL
DRAWN: T.F.M.
CHECKED: A.J.B.
DATE: 9-
PART NO. A-16