SERVICE PART Nº	COMPONENT PART Nº S.	Nº REQ'D
11290	11289	1
BODY	1311	2
11178	11175	1
COVER	6333-G	1
10927	10523	1
SEAL/SEAT	10926	1

MAJOR REPAIR KIT # 12240 Ⓓ
MINOR REPAIR KIT # 11179 Ⓔ

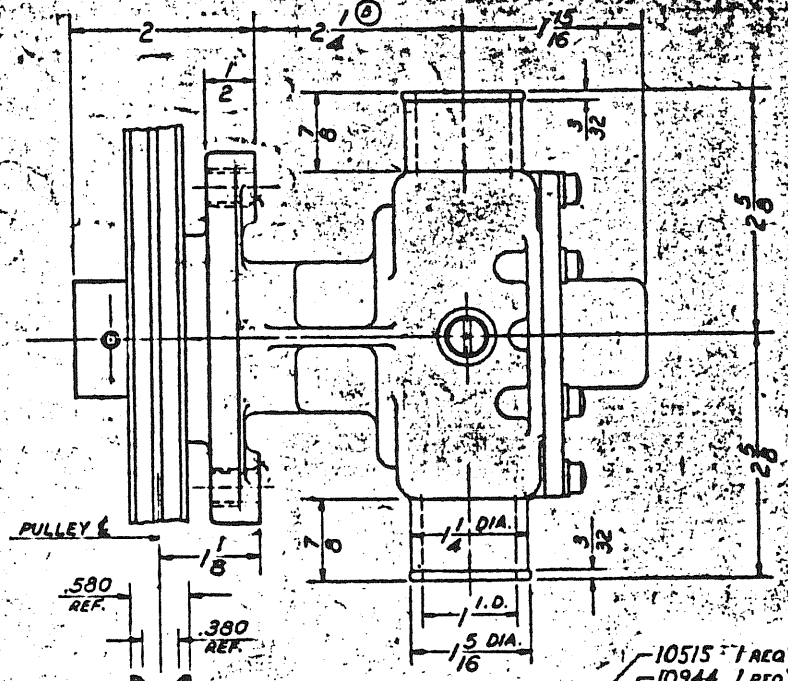

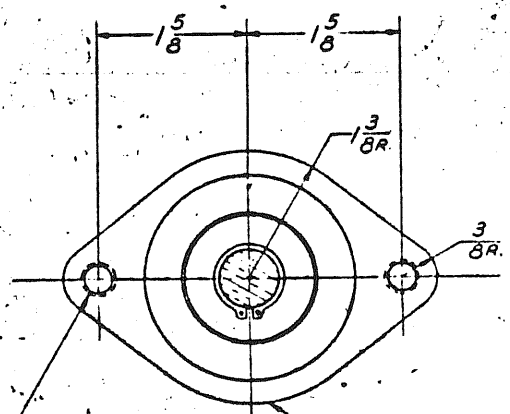

Ⓐ 3/8-16 UNC-2B, 2 HOLES

STAMP Nº C-03

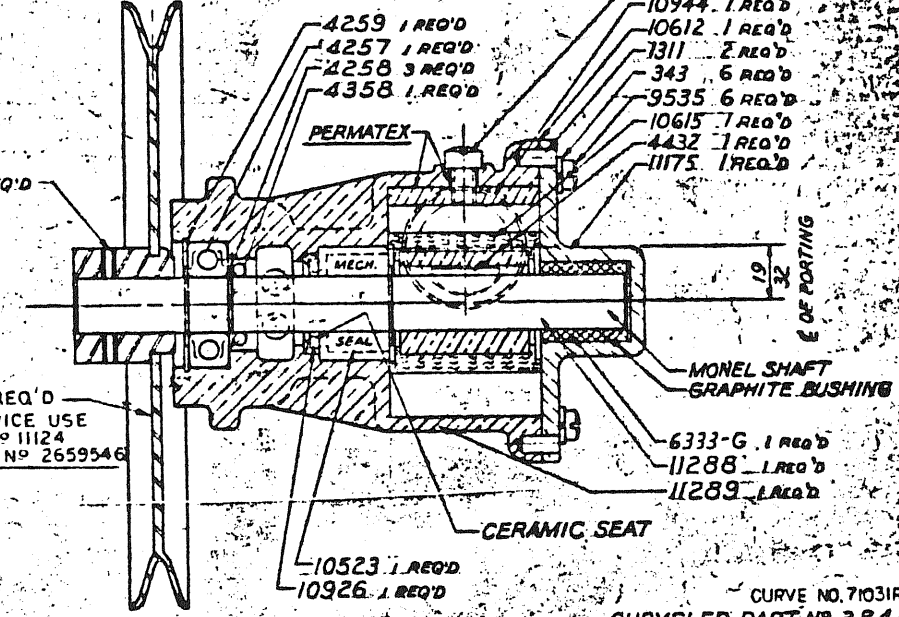

Ⓒ 11154 1 REQ'D
FOR SERVICE USE
PULLEY Nº 11124
CHRYSLER Nº 2659546

CAPACITY
30 G.P.M. @ 3000 R.P.M. PUMP SPEED

CURVE NO. 71031R
CHRYSLER PART Nº 2846428

E	11179 KIT, REVISED	RM	10-20-76
D	MAJOR SERVICE KIT ADDED	EM	2-18-72
C	PULLEY WAS Nº 11124	P.	3-26-71
	SERVICE NOTE ADDED	J. L.	
B	WAS 23/16	J.	9/12/66
A	WAS 1 3/32 DIA.		

SHERWOOD BRASS WORKS
DETROIT, MICHIGAN

TITLE: IMPELLER PUMP ASS'Y

MATERIAL: SEE DETAILS

SCALE: FULL

DRAWN: A.V.B.

CHECKED: ✓

APPROVED:

PART NO. C-03

SEE FLOW CHART S-11040