SERVICE PART NO.	COMPONENT PART NO'S	NO REQ'D
11427 HOUSING	11426-C	1
	1311	2
	6333-G	1
10927 SEAL/SEAT	10523	1
	10926	1
11430 REPAIR KIT	6333-G	1
	4257	2
	10927	1
	10931 Ⓒ	1
	10615	1

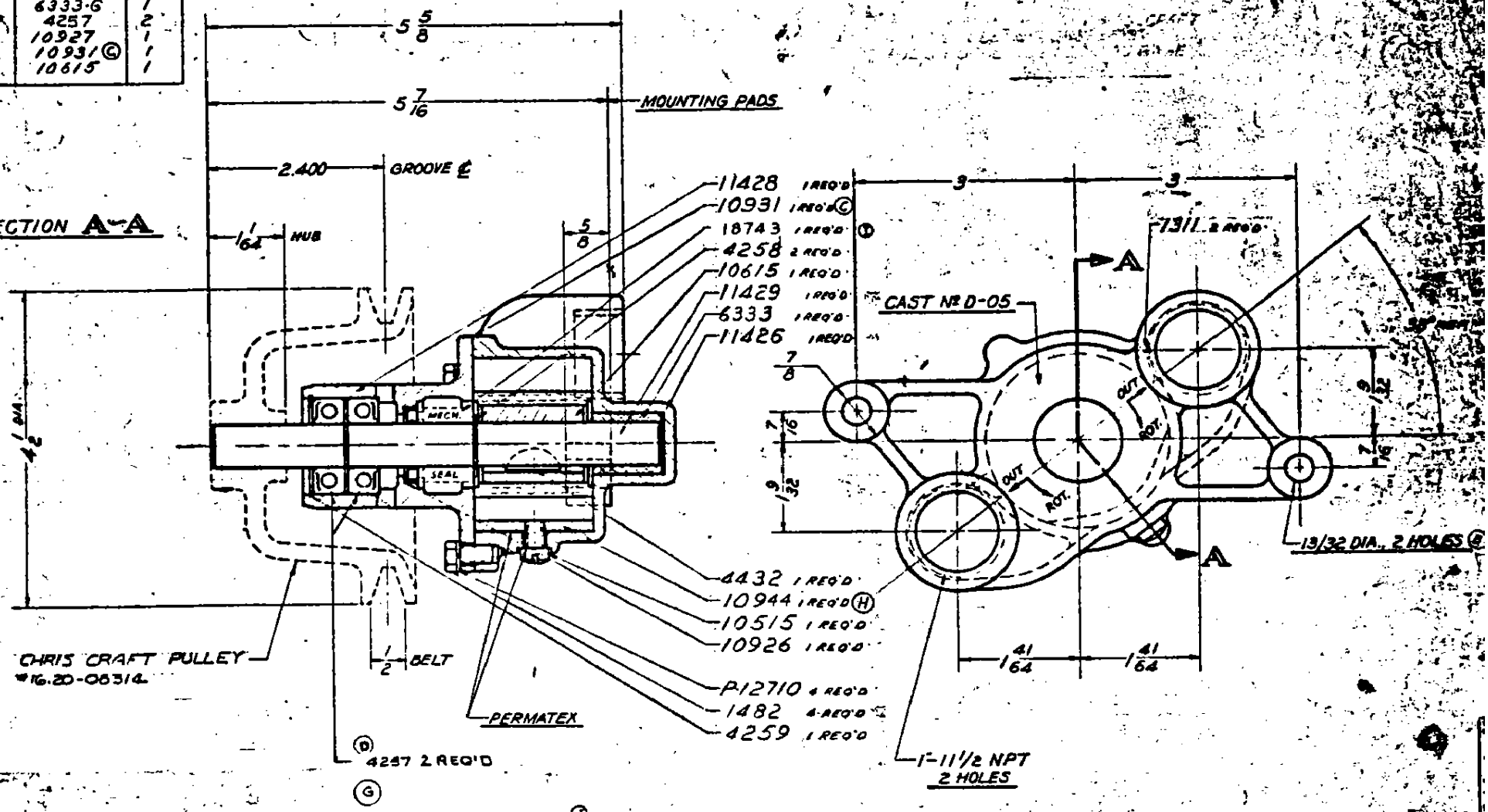

UNIT PACKAGING Ⓙ

No. 17636	CARTON W	1 REQ'D	
12209	LABEL	1 REQ'D	
14486	JIFFY BAGS	1 REQ'D	

CAPACITY
30 GPM @ 3800 RPM

J	CARTON & LABEL ADDED		
I	MECH. SEAL WAS 10523		
H	10944 WAS 10961		
G	4257 BRG WAS 10517		
F	9420 & NOTE REMOVED		
E	NOTES ADDED		
D	OPTIONAL BRG. ADDED		
C	WAS № 10971 GASKET		
B	MOUNTING HOLES POSITION REVISED PER SERIAL CHART		
A	DRAWING REVISED		

CURVE NO. 68007R

SHERWOOD
A DIVISION OF HYPRO CORPORATION
1591 E. JEFFERSON AVE. - DETROIT, MICHIGAN

TITLE: RUBBER IMPELLER PUMP ASS'Y

SCALE: FULL

SEE DETAILS

D-05

APR. 14. 2003 7:44AM HYPRO NO. 1498 P. 1