D-73

SERVICE PART NO.	COMPONENT PART NO'S	NO. REQD.
10577	12314	1
SEAL & SEAT	10389	1

PACK WITH TEXACO BALL JOINT GREASE BETWEEN SLINGER AND BEARING BEFORE ASSEMBLING

PERMATEX

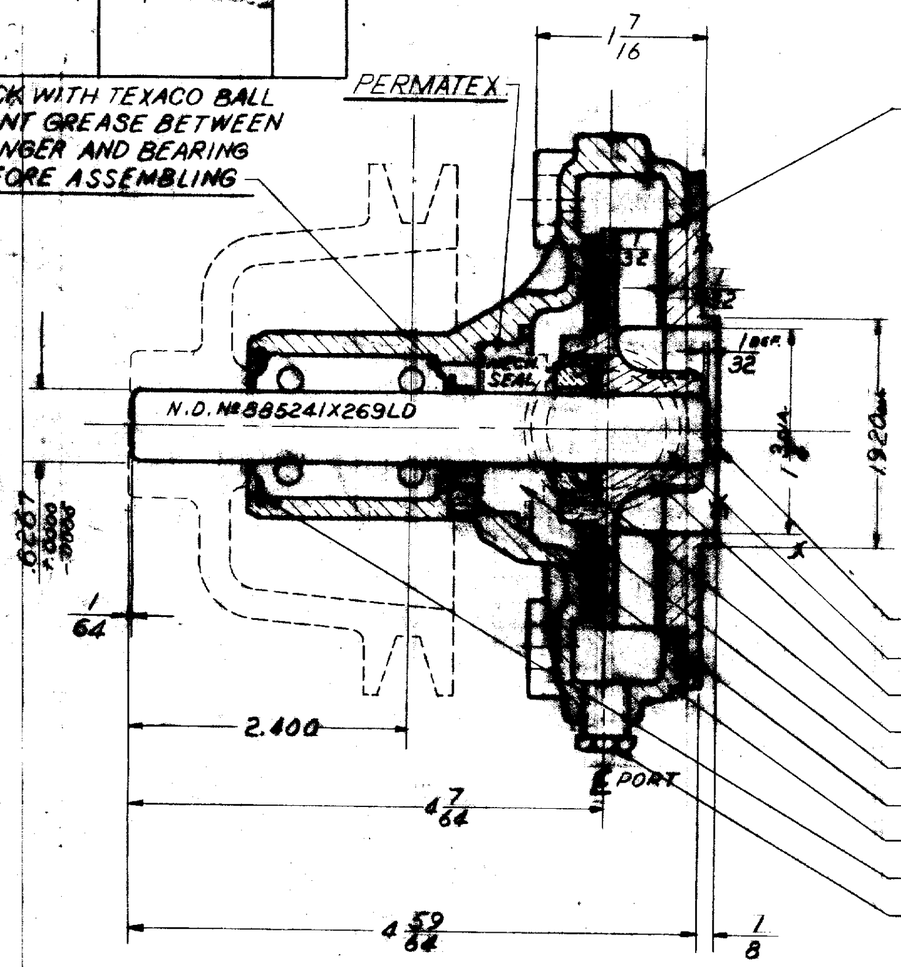

11425 1 REQ'D.

11423 1 REQ'D.
14055 1 REQ'D.
10835 1 REQ'D.
10389 1 REQ'D.
12314 1 REQ'D.
13315 1 REQ'D.
11418 1 REQ'D.
10574 1 REQ'D.
336 1 REQ'D.

CLOCKWISE ROTATION
(VIEW FROM PULLEY END)

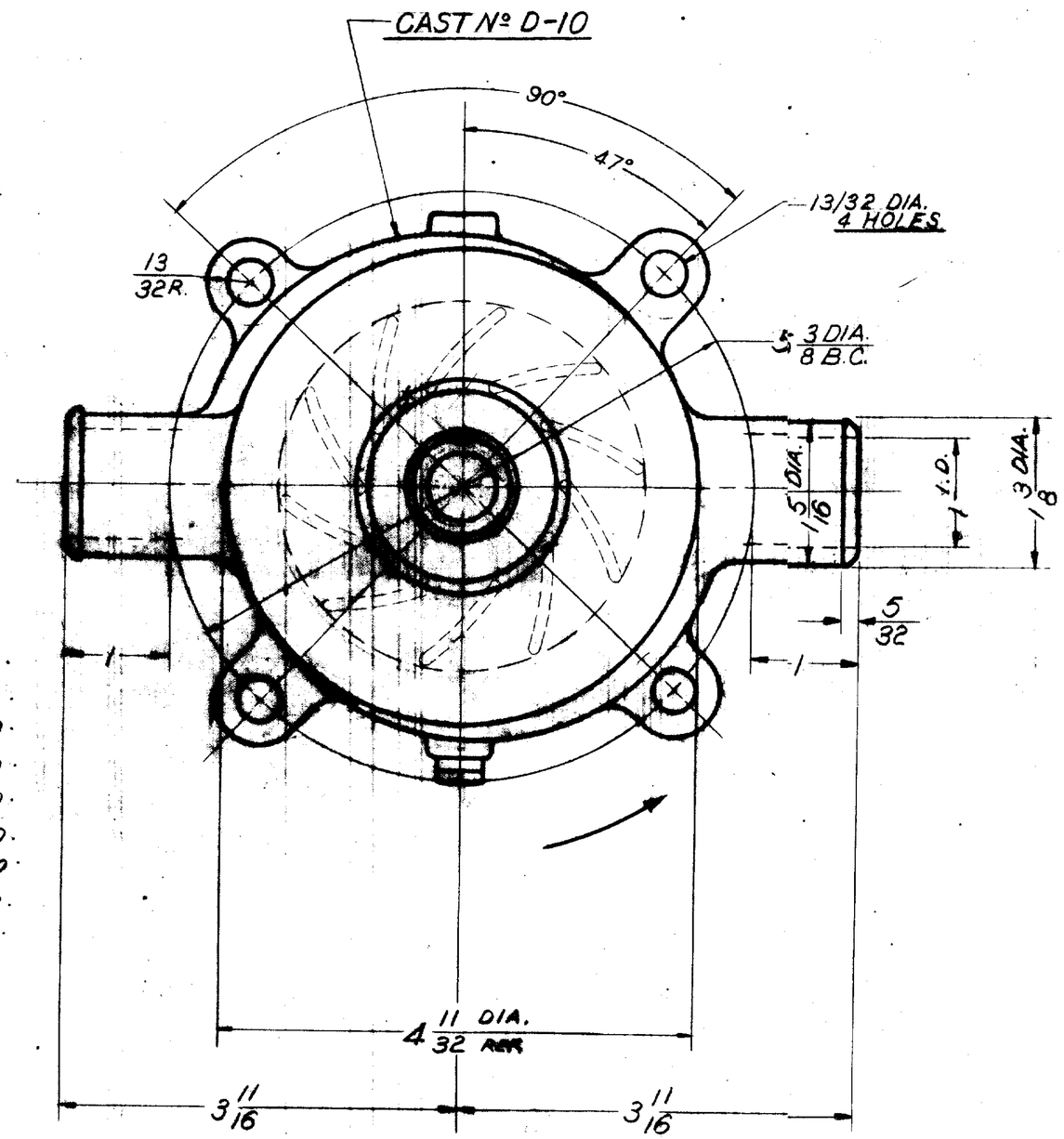

CAPACITY
30 G.P.M. EACH PORT
15 P.S.I. @ 4000 R.P.M.

SHIPPING:
CARTON 17636 © 1 REQ'D
LABEL 12209 1 REQ'D
JIFFY BAG # 5, 17653 1 REQ'D

CURVE NO. 68009

PROJECT № ACC-59

C	CARTON & LABEL ADDED	SM	1-10-68
B	14055 WAS 11420		
A	NOTE REMOVED		
REV.	DESCRIPTION	BY	DATE

DO NOT SCALE DRAWING
PLUS OR MINUS .005 UNLESS OTHERWISE ON FRACTIONAL DIMENSIONS. ALL HONES AND STOP CORNERS TO BE BURRED. ROUND TO .010 CORNERS AND FILLETS TO BE SHARP UNLESS OTHERWISE SPECIFIED.

SHERWOOD
A DIVISION OF HYPRO CORPORATION
3600 E. JEFFERSON AVE. @ DETROIT, MICHIGAN 48207

TITLE: CENTRIFUGAL PUMP ASS'Y (CIRC'G)
MATERIAL: SEE DETAILS
SCALE: FULL
DRAWN: B.R. DATE: 1-10-68
CHECKED: A.K.B. DATE: 1-11-68
APPROVED
REQ'D.
REF: P-10580
PART NO. D-10