COUNTER-CLOCKWISE ROTATION
(VIEW FROM PULLEY END)

SERVICE PART NO.	COMPONENT PART NO'S	NO. REQ'D.
10577 SEAL & SEAT	12314	1
	10389	1

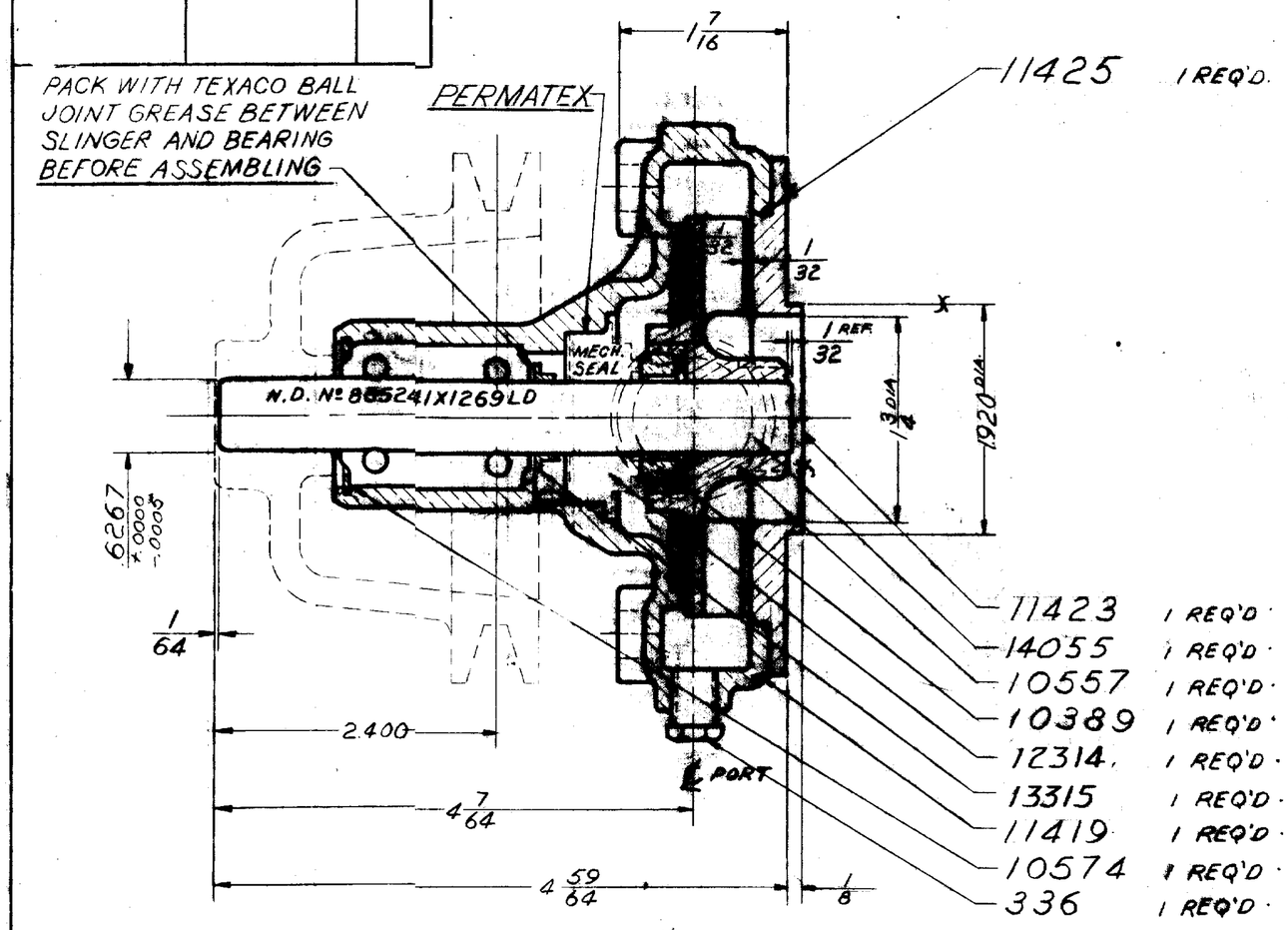

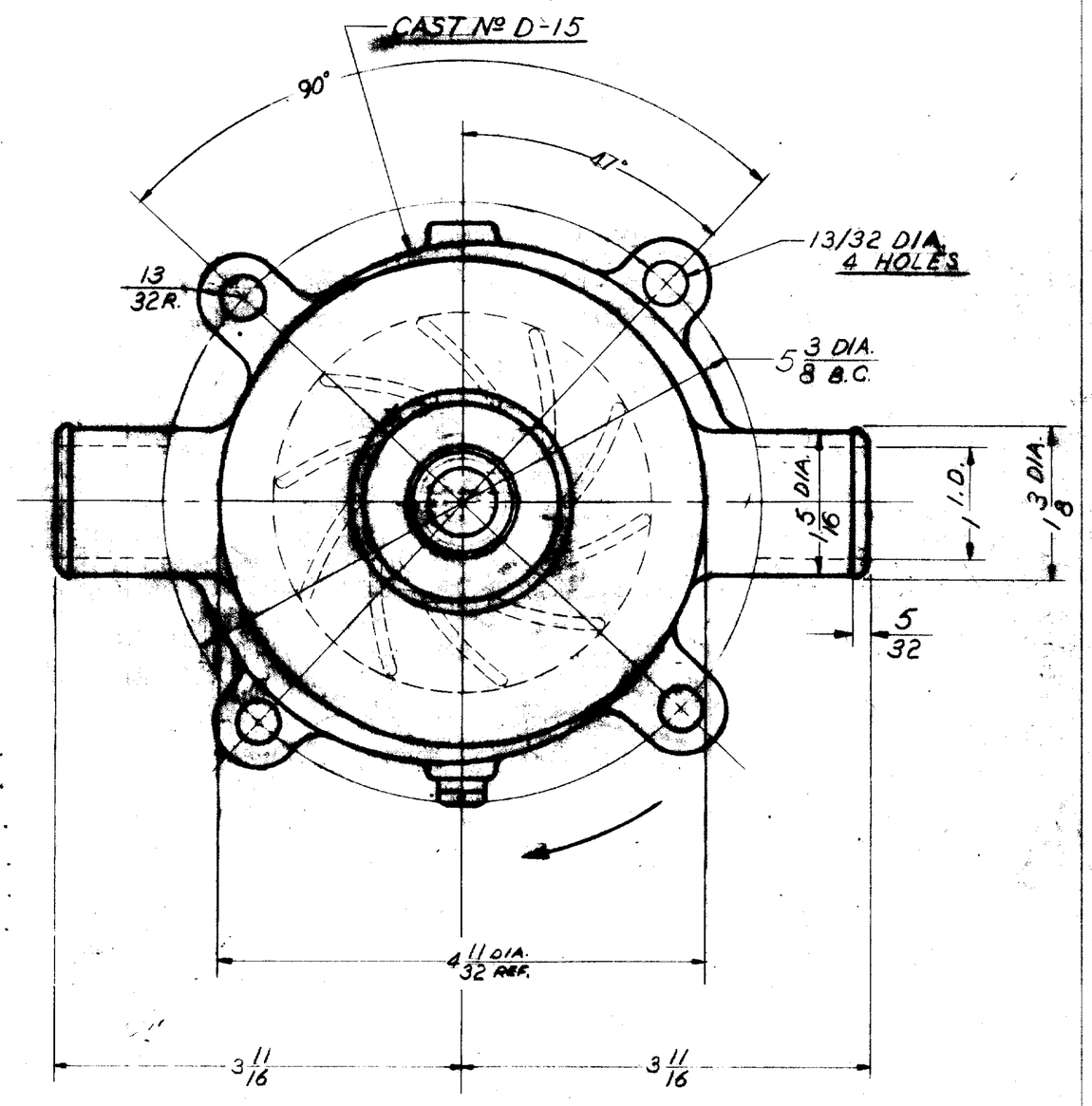

CAPACITY
30 G.P.M. EACH PORT
15 P.S.I. @ 4000 R.P.M

© PACKAGING:

CARTON	17636	1 REQ'D
LABEL	12209	1 REQ'D
JIFFY BAG #5	17653	1 REQ'D

CURVE NO. 68009

REV.	DESCRIPTION	CKD	DATE
C	CARTON & LABEL ADDED	SM	9/14/69
B	14055 WAS 11420		3-4-68
A	NOTE REMOVED	RBA	9/20/72

DO NOT SCALE DRAWING
PLUS OR MINUS .005 ALLOWED ON FRACTIONAL DIMENSIONS. RUE HOLES AND SHARP CORNERS TO BE BURRED .005 TO .010 CORNERS AND FILLETS TO BE 3/16R. UNLESS OTHERWISE SPECIFIED.

SHERWOOD
A DIVISION OF HYPRO CORPORATION
6601 E. JEFFERSON AVE. - DETROIT, MICHIGAN

TITLE	IMPELLER PUMP ASS'Y	MATERIAL	SEE DETAILS
SCALE FULL	REQ'D.		
DRAWN B.R.	DATE 1-11-68	PART NO.	D-15
CHECKED A.V.B.	DATE 1-15-68		
APPROVED		REF. N-10490	

PROJECT NO. ARC-60