F-75

PARTS LIST

ITEM	PART Nº	DESCRIPTION	REQ'D	
1	10769	SHEAVE BRACKET	1	
2	9420	GROOV-PIN	1	
3	4259	RETAINING RING	1	
4	4258	RETAINING RING	2	
5	4257	BALL BEARING	1	
6	10926	SEAL SEAT	1	
7	10525	MECH SEAL	1	
8	10615	RUBBER IMPELLER	1	
9	4432	KEY	1	
10	10944	CAM	1	(B) (D)
11	12194	HOUSING	1	
12	10971	GASKET	1	
13	R12710	LOCKWASHER	4	
14	1482	CAPSCREW 1/4-20	4	
15	10182	COVER	1	
16	6333-G	GRAPHITE BUSHING	1	
17	10515	CAPSCREW	1	
18	1311	PIN	2	
19	336	DRAIN PLUG	1	(B)
20	12316	SHAFT	1	(B)
21	12195	SPACER WASHER	1	
22	12320	DRAIN PLUG (SLOTTED)	1	(C)
23	13285	TAG	1	

SERVICE ASS'Y NO.	COMPONENT ITEM NO.
SEAT & SEAL ASS'Y Nº 10927	6 & 7
MAJOR KIT Nº 12417	12(1) 6(2) 7(1) 8(1) 10(1) 21(1) 15(4) 16(1) 9(1) 3(1) 4(2) 2(1) 5(2) 5(1)
MINOR KIT 12418	6(1) 12(1) 7(1) 5(1) 4(2) 3(1) (F)

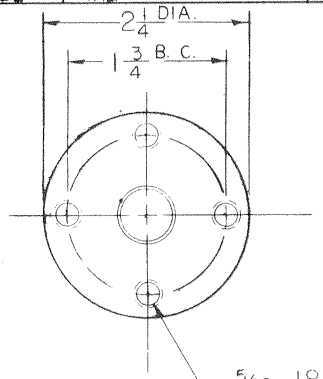

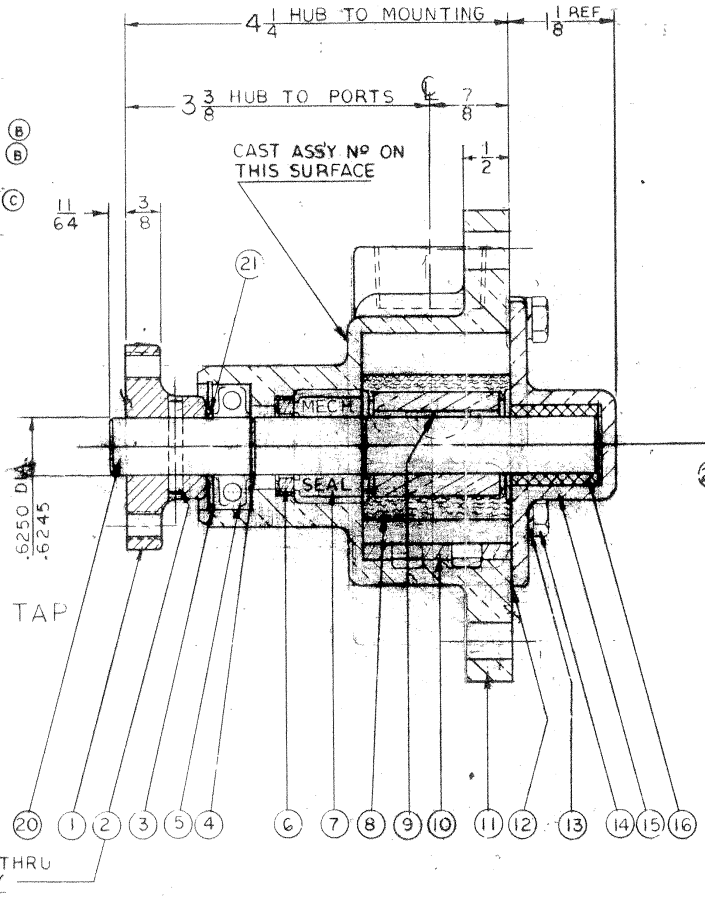

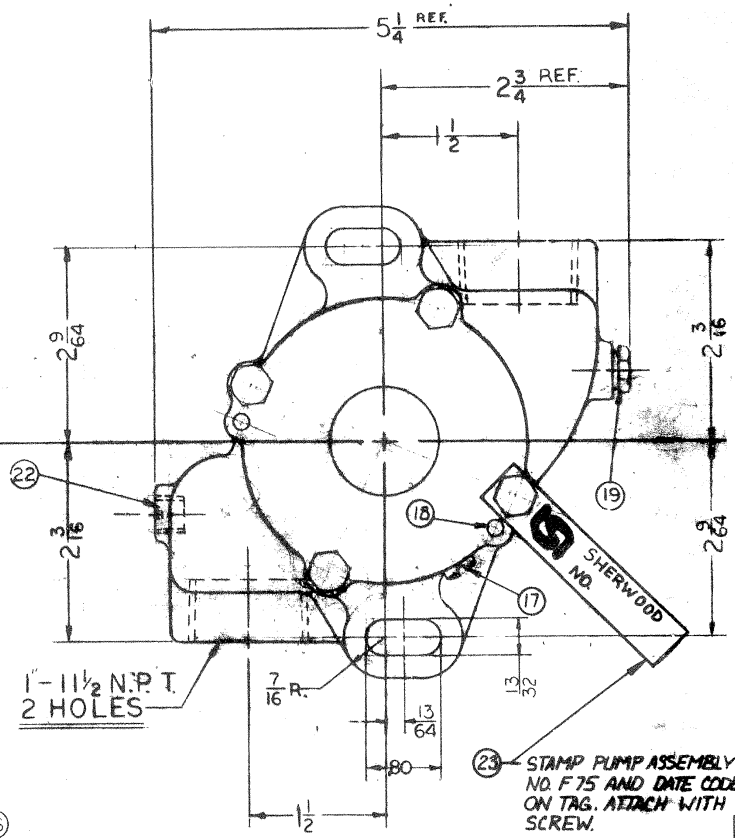

(E) THIS PUMP ASSY IS TO BE SHIPPED TO THE CUSTOMER IN A NO. 11 CARTON (WITH INSERTS) 16 PUMPS TO A CARTON

REV.	DESCRIPTION	EXE	DATE
G	ADDED TAG NO. 13285		
F	SERVICE KIT ADDED	RM	8/1/75
E	NOTES ADDED	RM	8/1/75
D	ITEM Nº 10, 10944 WAS 10961	[illegible]	7-17-72
C	ITEM 22 ADDED	[illegible]	5/6
B	ITEMS 10, 19 & 20 REVISED	RM	[illegible]
A	RELEASED FOR PRODUCTION	[illegible]	8-11-70

DO NOT SCALE DRAWING

FLOW CHART 64004R

LEAR SIEGLER INC. / SHERWOOD DIVISION DETROIT, MICH

title PUMP ASS'Y RUBBER IMPELLER		mat'l SEE DETAIL
scale FULL	req'd 1	part no. F-75
drawn PJL	date 8-30-71	
ck'd RBM	date 8-30-71	
approved	date	

SCALE FACTOR