R-10870-G

SERVICE PART NO.	COMPONENT PART NO'S	NO. REQ'D
10177 BODY	10176 1311	1 2
10096 COVER	10094 6333-G	1 1
10927	18743	1
SEAL & SEAT	10926	1

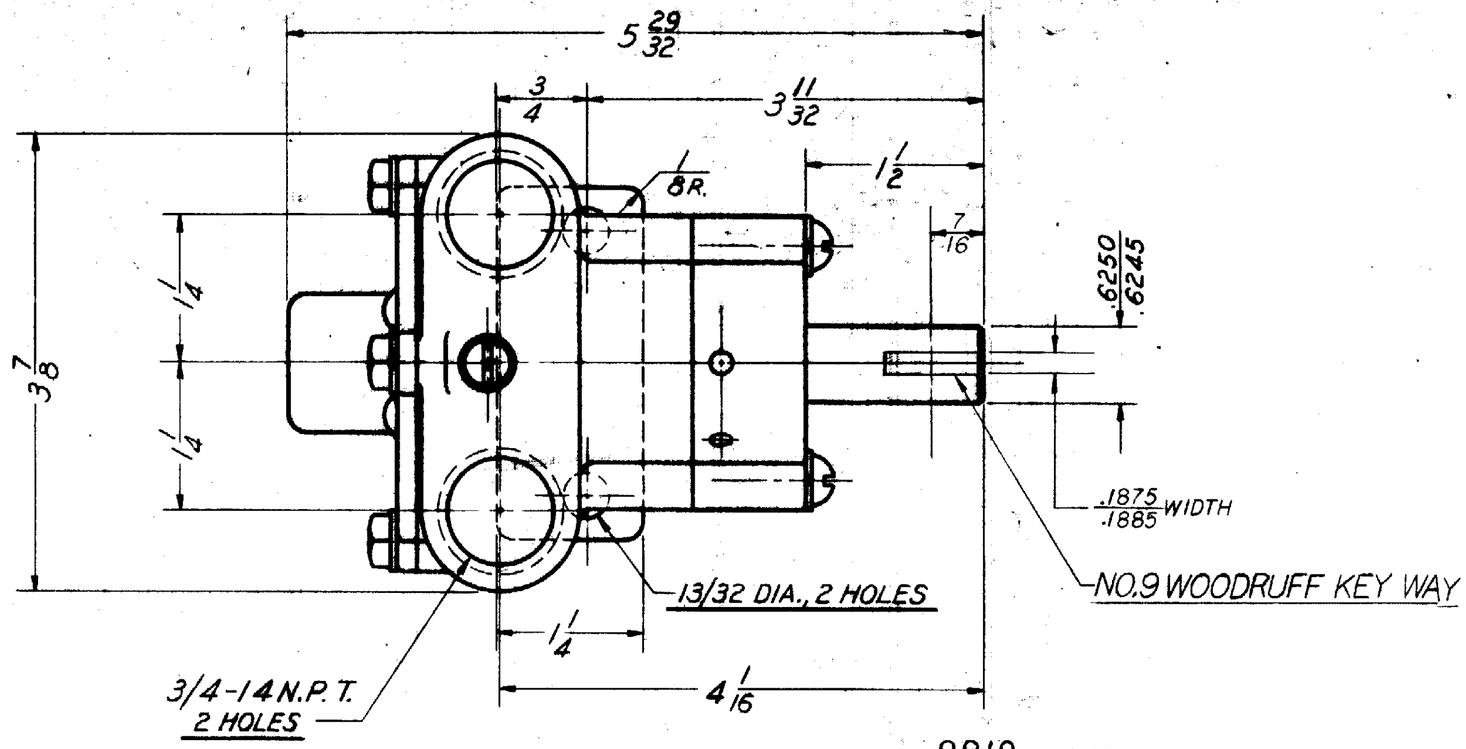

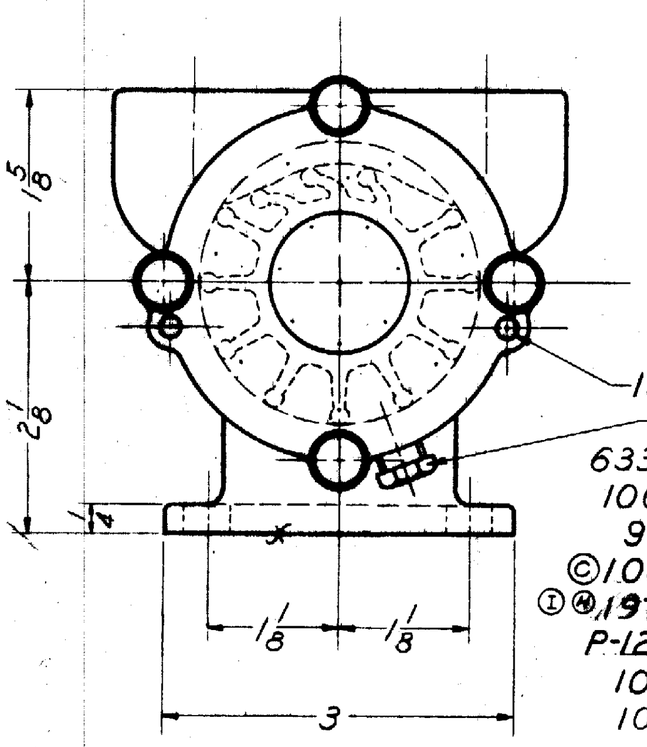

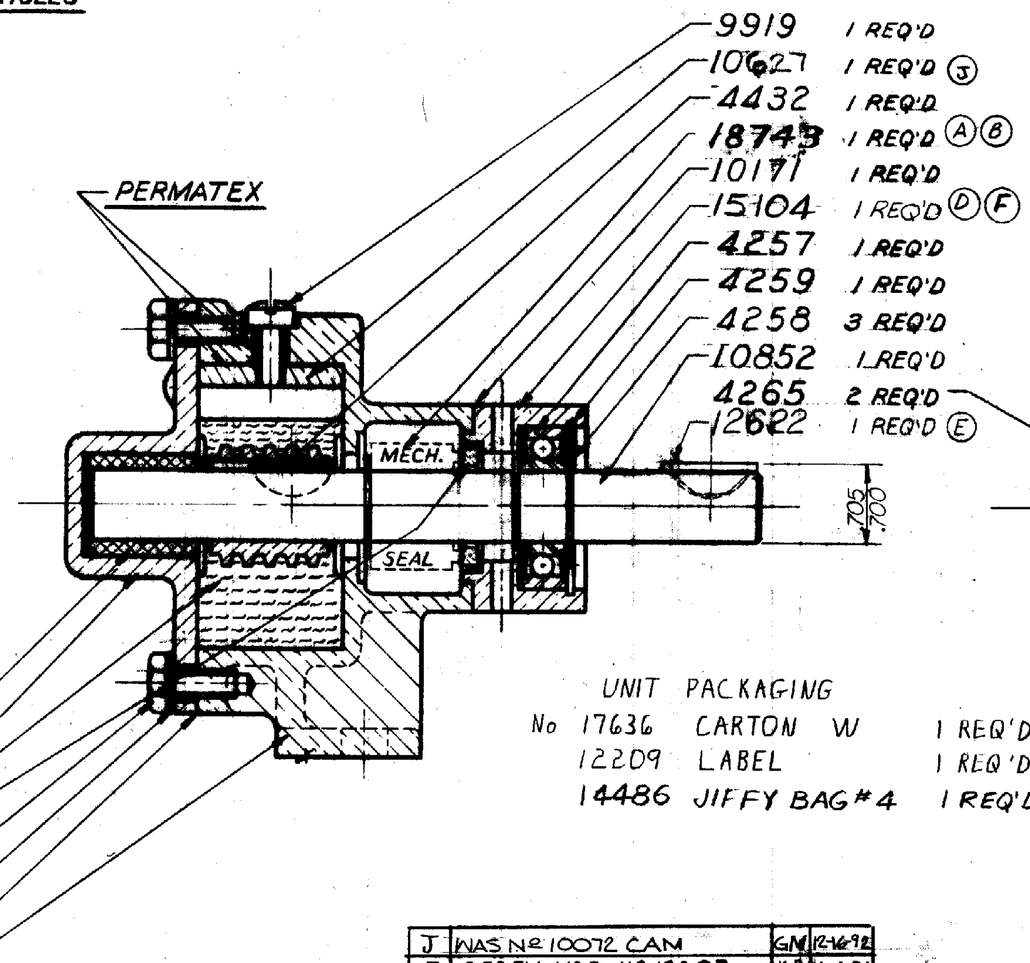

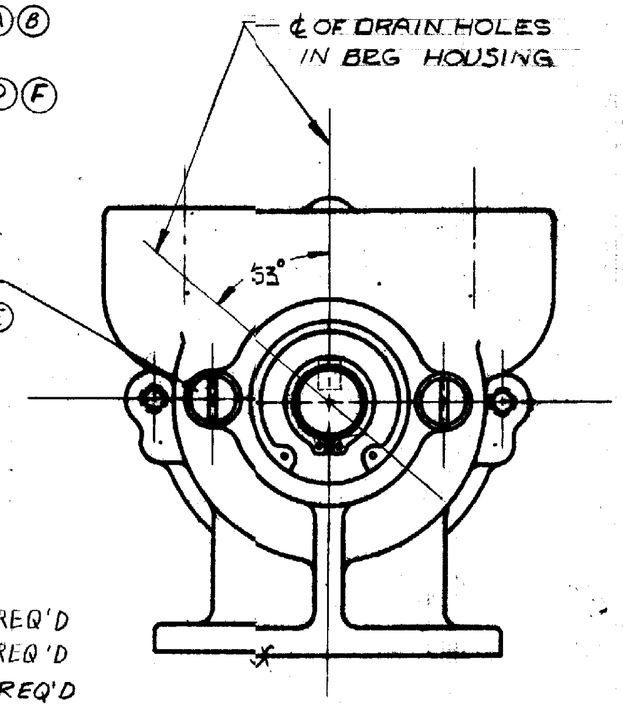

UNIT PACKAGING

No	17636	CARTON W	1 REQ'D
	12209	LABEL	1 REQ'D
	14486	JIFFY BAG #4	1 REQ'D

CAPACITY
16 G.P.M. @ 3000 R.P.M. MAX.

REF FLOW CURVE R-50-G

SAME AS F15

REV.			DATE
J	WAS Nº 10072 CAM	GM	12-16-92
I	SCREW WAS Nº 19297	KB	10-4-91
H	WAS Nº 1482 CAPSCREW	AVG	6/12/90
G	MECH. SEAL WAS 10522	KB	[illegible]
F	15104 HSG WAS 11384A	AM	11-5-85
E	12622 KEY ADDED	RM	1-12-78
D	WAS Nº 10172 HOUSING	[illegible]	5/1/87
C	Nº [illegible] SEAT ADDED	[illegible]	5/1/87
B	WAS Nº 7159 SEAL	[illegible]	[illegible]
A	WAS Nº 10159 SEAL	[illegible]	[illegible]

ON THIS SCALE DRAWING PLUS OR MINUS .005 ALLOWED ON FRACTIONAL DIMENSIONS. ALL HOLES AND SHARP CORNERS TO BE DEBURRED AND TO .010 CORNERS AND FILLETS TO BE TRUE WITHIN 50 PERCENT OF GIVEN RADII.

SHERWOOD
A DIVISION OF HYPRO CORPORATION

TITLE: IMPELLER PUMP ASS'Y

MATERIAL: SEE DETAILS

SCALE: FULL
DRAWN: A.V.G.
CHECKED
APPROVED
DATE: 1-18-68

PART NO. R-10870-G