MAJOR REPAIR KIT # 12243 (E)
MINOR REPAIR KIT # 12949 (F)

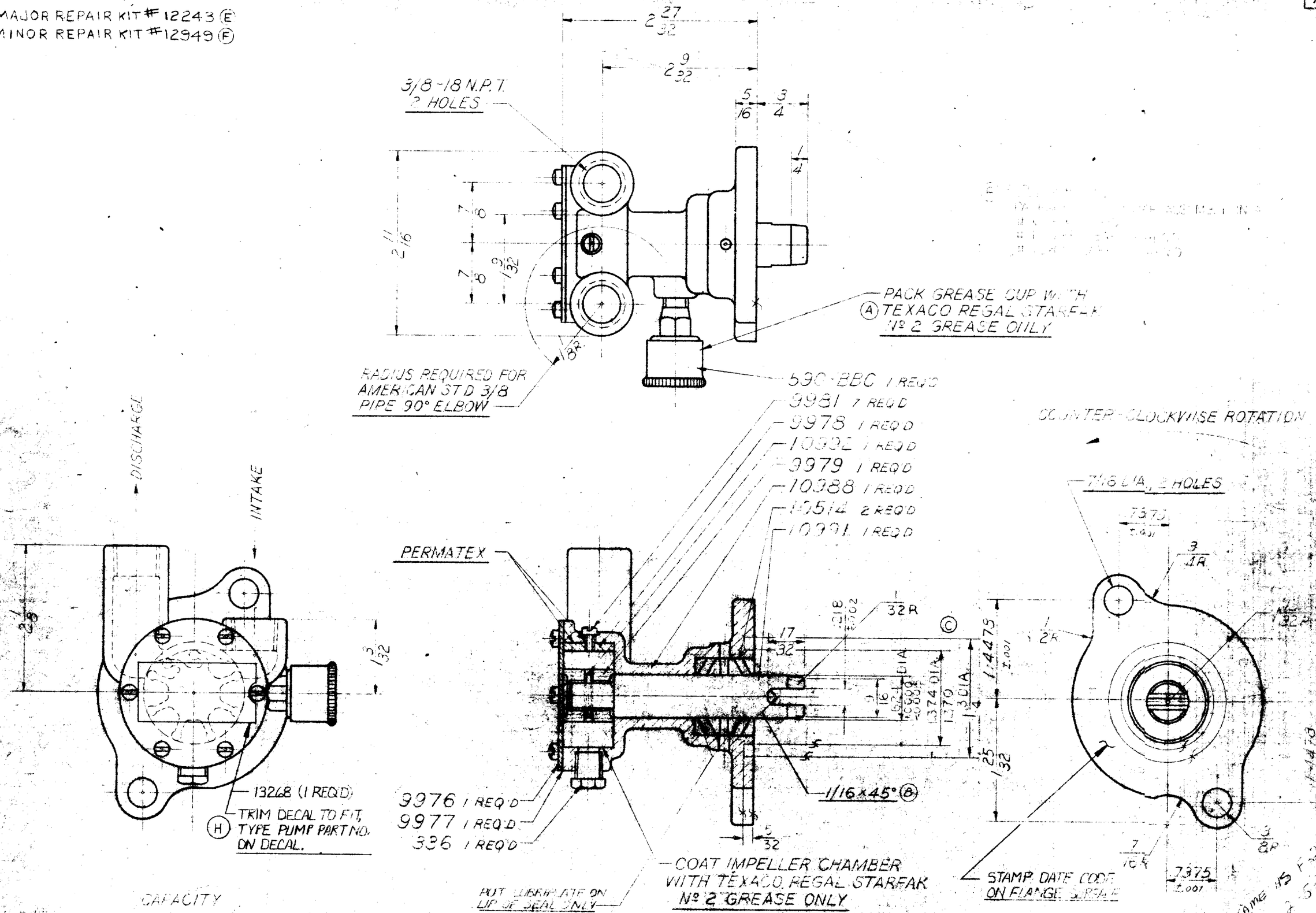

CAPACITY
1.5 G.P.M. @ 1000 R.P.M.

REF: ATOMIC FOUR ENGINE FLOW CHART 4-10 REV.

H	DECAL ADDED # 13268		
G	PACKAGING NOTE ADDED	RM 7-31-74	
F	12949 KIT ADDED		
E	12243 KIT ADDED		
D	MAJOR SERVICE KIT ADDED		
C	PILOT GROOVE ADDED		
B	[illegible]		
A	[illegible]		

SHERWOOD BRASS WORKS
DETROIT, MICHIGAN

TITLE: IMPELLER PUMP ASS'Y
MATERIAL: SEE DETAILS
SCALE: FULL
DRAWN: V.B.
DATE: [illegible]
PART NO.: T-1116